FHP-590 | Air Conditioner/Heat Exchanger

Air Cooled
Flush Mounted
Nema-4, 4X

48 VDC
High Efficiency
415 BTU/HR

FEATURES

- Compact (only 10" X 5.86" X 7.97")
- Mounts and operates in any orientation: horizontal, vertical, etc.
- Low vibration and noise
- No moving parts except fans
- Environmentally safe
- No compressor, fluorocarbons or filters
- Virtually maintenance-free operation
- Stainless steel exterior housing
- Efficient heat exchanger mode (ECO-Mode)
- Weight 16 LBS.



CONTROL TEMPERATURES

Active Cooling	35 °C
Heat Exchanger (ECO-Mode)	25 °C
Active Heating	10 °C
Typical Hysteresis	5 °C
Operating Ambient	-40/+70 °C
Operating Enclosure	-10/+60 °C

INCLUDES

- Temperature controller
- Mounting gasket
- Mounting hardware
- Power input leads
- Power saving heat exchanger mode (ECO-Mode)

POWER INPUTS

Voltage	48 VDC
Current, Active	3.5 AMPS
Current, ECO-Mode	0.15 AMPS

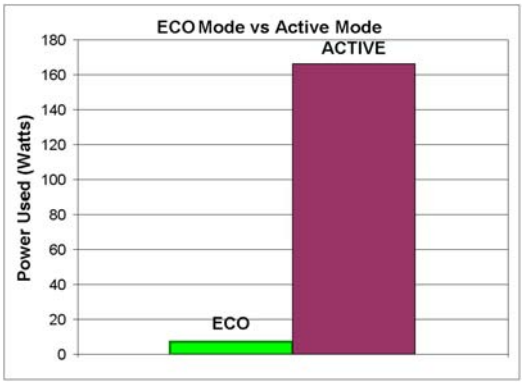

PERFORMANCE RATINGS

Cooling (Traditional)	416 BTU/HR
Cooling (Din 3168)	124 WATTS
Cooling COP (at L35 L35)	0.75
Heating (Traditional)	> 562 BTU/HR
Heating (Din 3168)	> 165 WATTS
Heating COP	> 1.0

CONFIGURATIONS

MODEL	PART NUMBER	NOTES	TEMPERATURE CONTROL	ENVIRONMENT
FHP-590XE	7-G0J6-4-001	Cool only, sealed hot side fan	TC-4F	NEMA-4/4X, IP 56
FHP-590XEHC	7-G096-5-001	Heat/Cool, sealed hot side fan	None*	NEMA-4/4X, IP 56
FHP-590XEHC	7-G0I6-5-001	Heat/Cool, sealed hot side fan	TC-7F	NEMA-4/4X, IP 56
FHP-590X	7-G0J6-2-001	Cool only, Mil. grade hot side fan	TC-4F	NEMA-4X/Harsh, IP 56
FHP-590XHC	7-G096-3-001	Heat/Cool, Mil. grade hot side fan	None*	NEMA-4X/Harsh, IP 56
FHP-590XHC	7-G0I6-3-001	Heat/Cool, Mil. grade hot side fan	TC-7F	NEMA-4X/Harsh, IP 56

* For controller options contact TECA; Heating function via reverse polarity (controller dependent)

FHP-590

MOUNTING STYLE
Flush Mounted

ENVIRONMENTS SERVED
NEMA-4/4X IP 56

RATING (TRADITIONAL)
415 BTU/hr @ 0 °F ΔT

RATING (DIN 3168)
124 Watts L35 L35
68 Watts L35 L50

PERFORMANCE CURVE

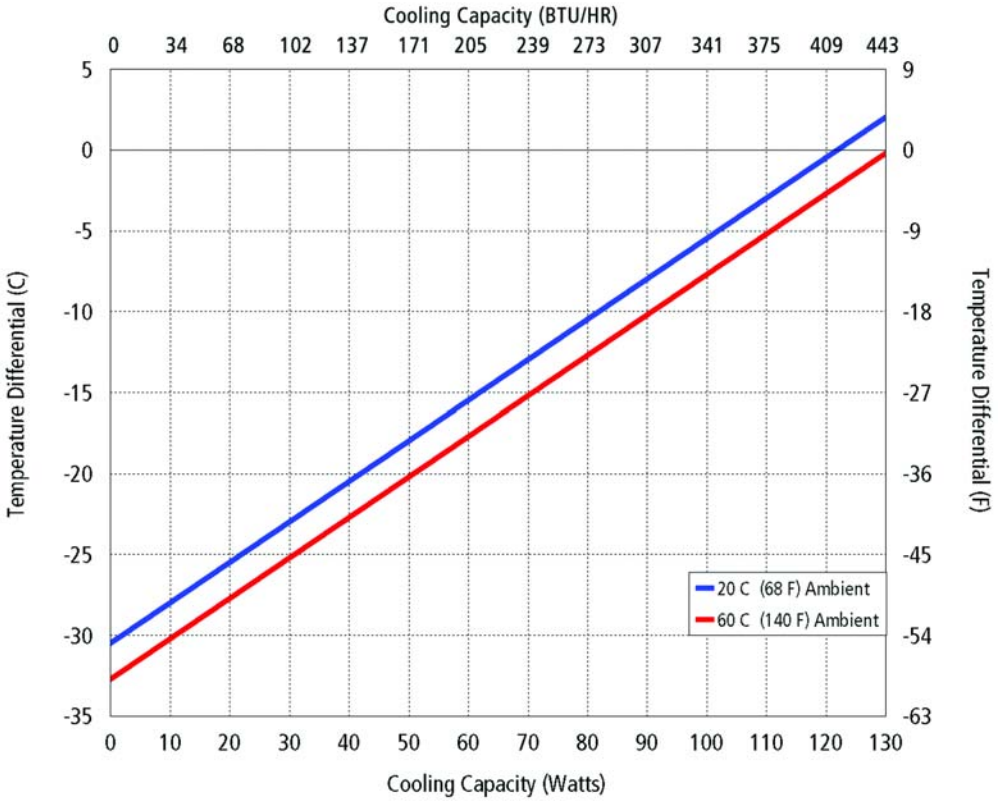

Equation of Line: y=ΔT(°C) x=Capacity (Watts)		
Ambient Temp	**20°C**	**60°C**
FHP-590	y=.25x-30.5	y=.25x-32.7

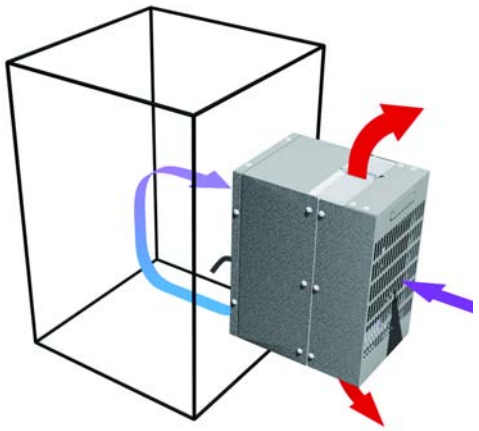

Air Flow Pattern

DIMENSIONS

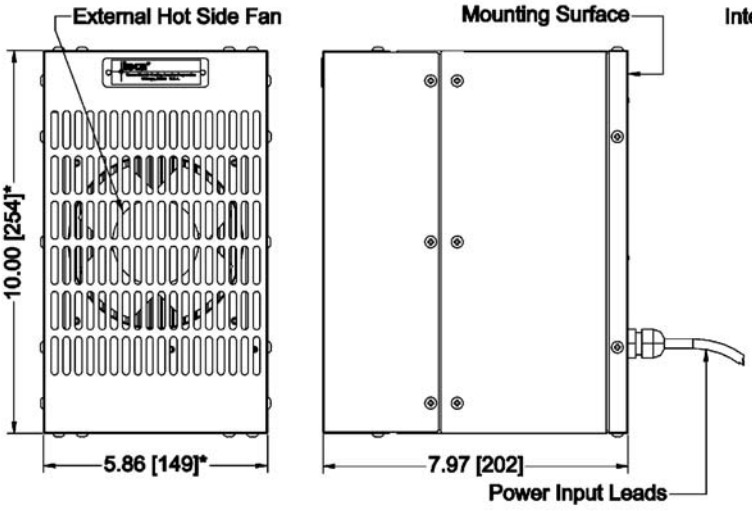

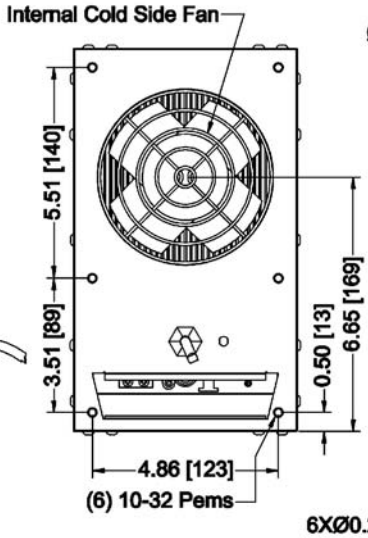

MOUNTING CUTOUT DIMENSIONS

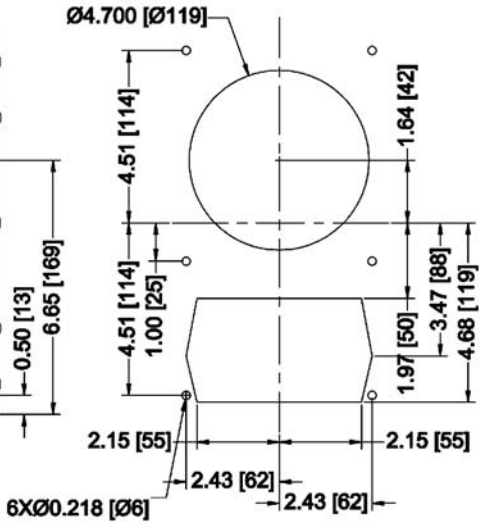

* Dimension does not include hardware and gasket
Mounting hardware and gasket included but not shown
Dimensions: Inches [Millimeters]